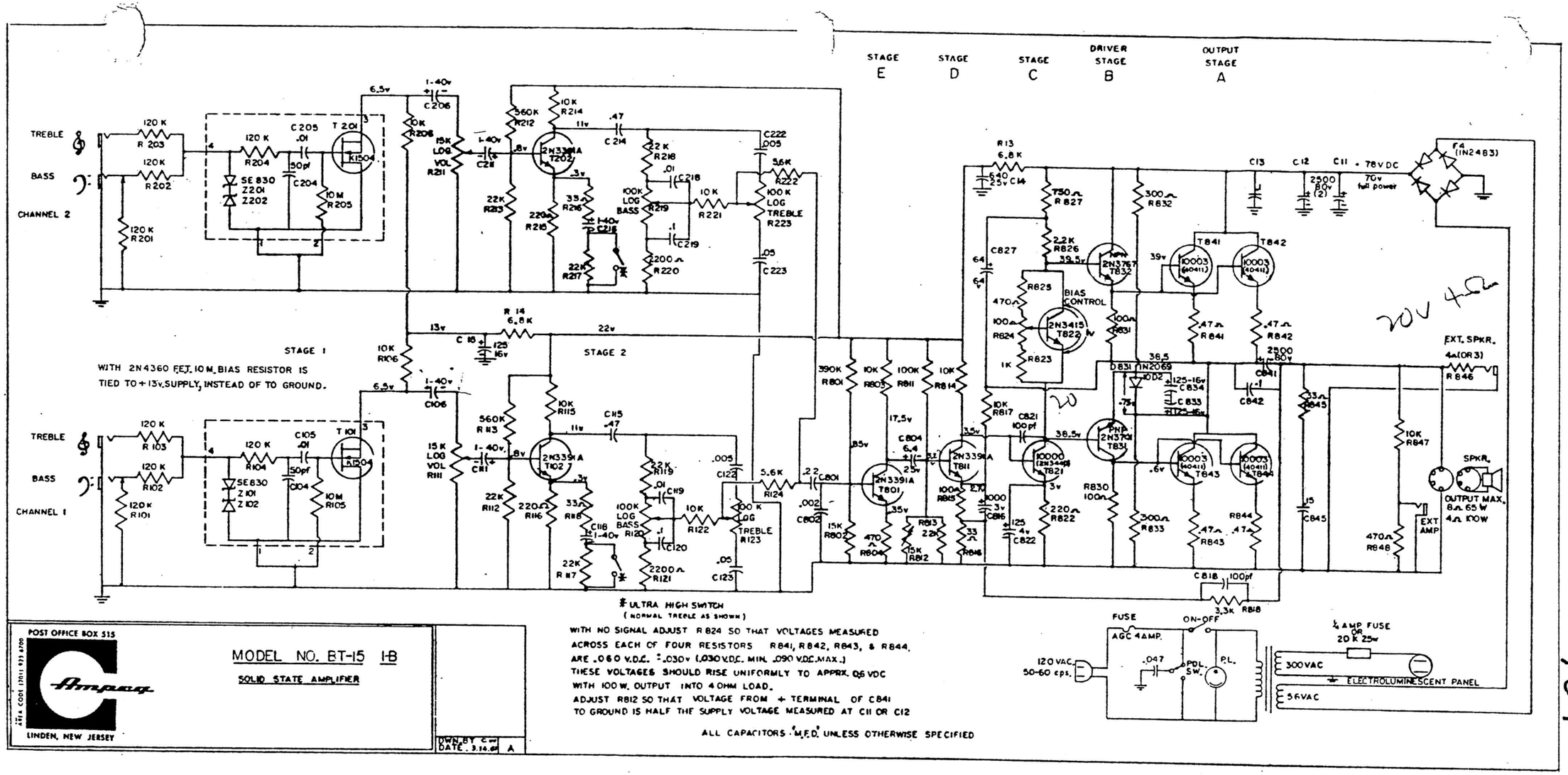

ULTRA HIGH SWITCH
(NORMAL TREBLE AS SHOWN)

WITH NO SIGNAL ADJUST R824 SO THAT VOLTAGES MEASURED ACROSS EACH OF FOUR RESISTORS R841, R842, R843, & R844, ARE .060 V.D.C. ±.030v (.030 V.D.C. MIN. .090 V.D.C. MAX.) THESE VOLTAGES SHOULD RISE UNIFORMLY TO APPRX. .06 VDC WITH 100 W. OUTPUT INTO 4 OHM LOAD.

ADJUST R812 SO THAT VOLTAGE FROM + TERMINAL OF C841 TO GROUND IS HALF THE SUPPLY VOLTAGE MEASURED AT C11 OR C12

ALL CAPACITORS MFD. UNLESS OTHERWISE SPECIFIED

2/67