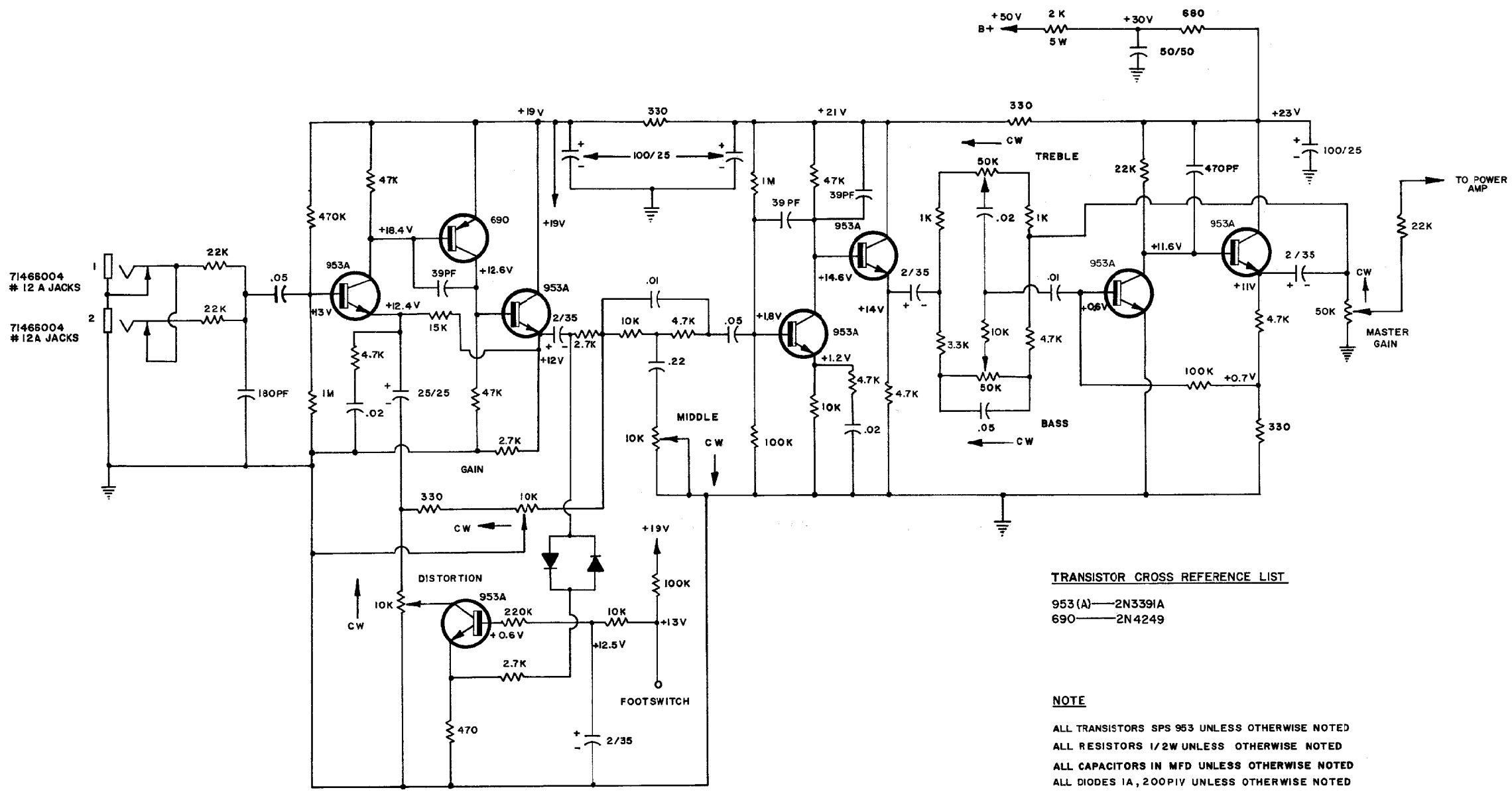

TRANSISTOR CROSS REFERENCE LIST

953(A)——2N3391A
690——2N4249

NOTE

ALL TRANSISTORS SPS 953 UNLESS OTHERWISE NOTED
ALL RESISTORS 1/2W UNLESS OTHERWISE NOTED
ALL CAPACITORS IN MFD UNLESS OTHERWISE NOTED
ALL DIODES 1A, 200PIV UNLESS OTHERWISE NOTED

POTENTIOMETERS:

71190007 =10K HPC LIN
71190008 =50K HPC LIN

CENTURY™ PREAMP
A-SERIES
BD.#99000600

P/N 81515086

PEAVEY® ELECTRONICS CORP.
MERIDIAN, MS
DRAWN BY RMH DATE
C.B. CHECK RMH
REVISED 12/12/80 RSG

COPYRIGHT 1980 PEAVEY ELECTRONICS CORP. PRINTED IN U.S.A.

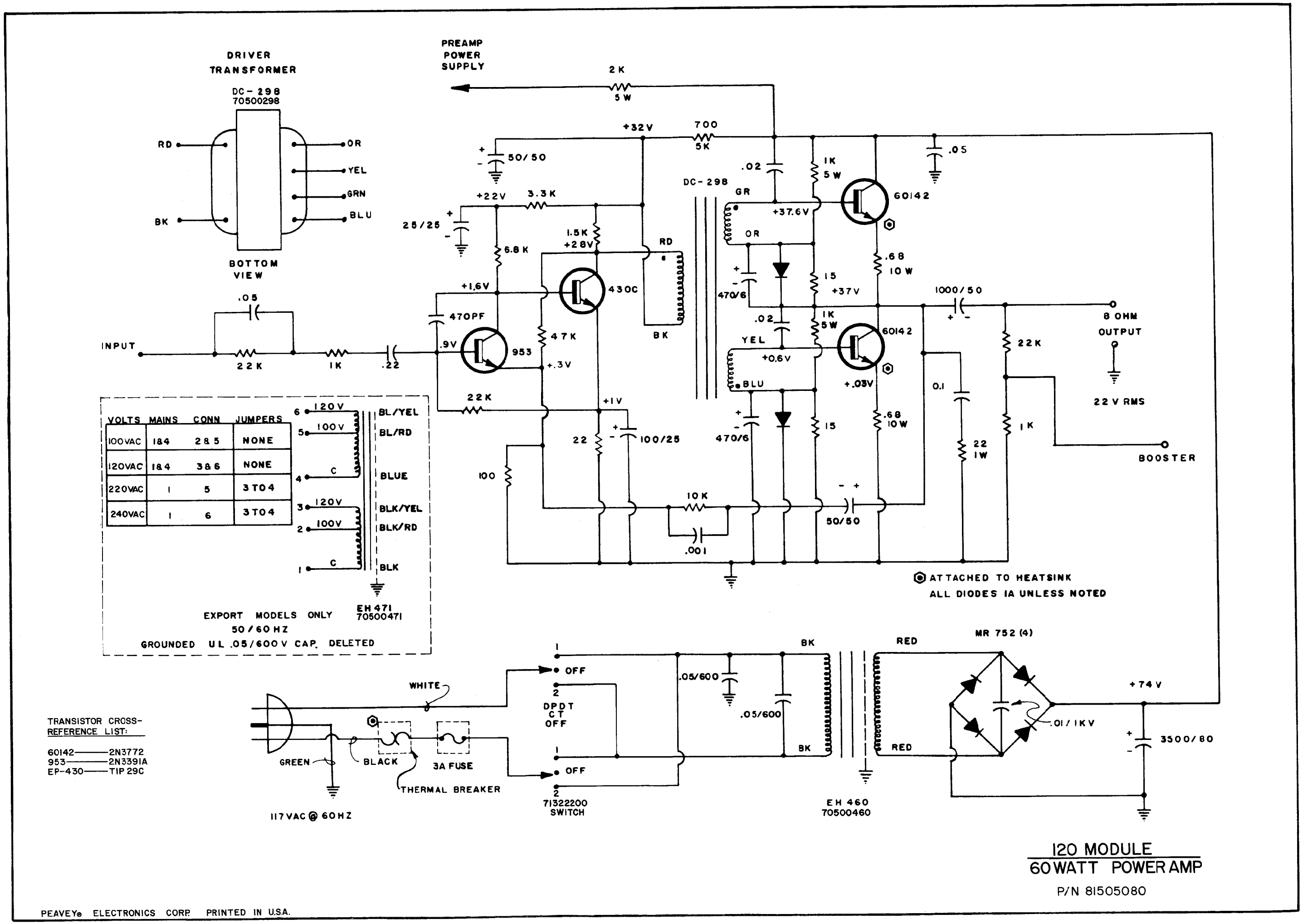

120 MODULE
60 WATT POWER AMP

P/N 81505080

PEAVEY® ELECTRONICS CORP. PRINTED IN U.S.A.

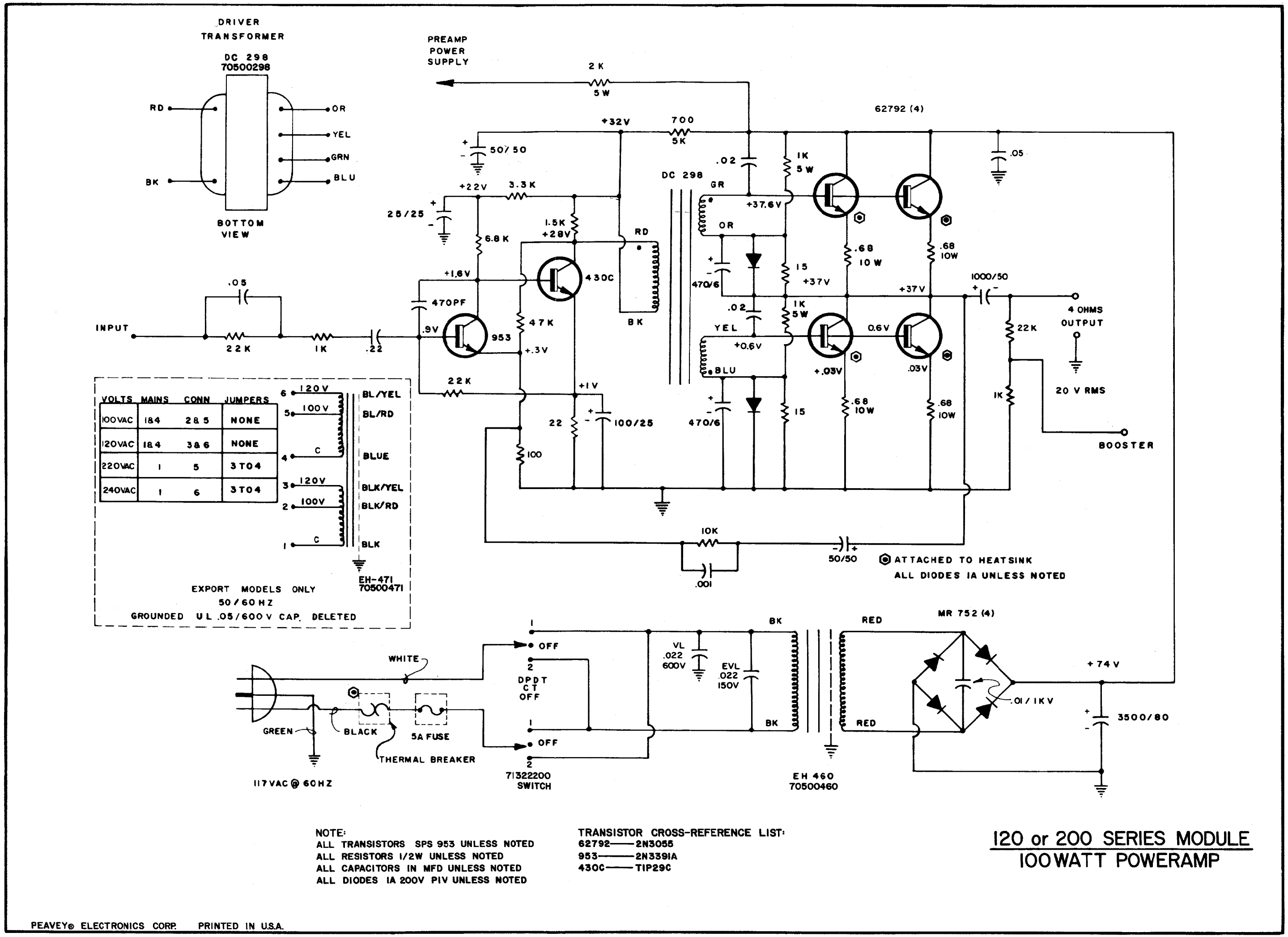

NOTE:
ALL TRANSISTORS SPS 953 UNLESS NOTED
ALL RESISTORS 1/2W UNLESS NOTED
ALL CAPACITORS IN MFD UNLESS NOTED
ALL DIODES IA 200V PIV UNLESS NOTED

TRANSISTOR CROSS-REFERENCE LIST:
62792——2N3055
953——2N3391A
430C——TIP29C

120 or 200 SERIES MODULE
100WATT POWERAMP