REV. C 1974 V4B

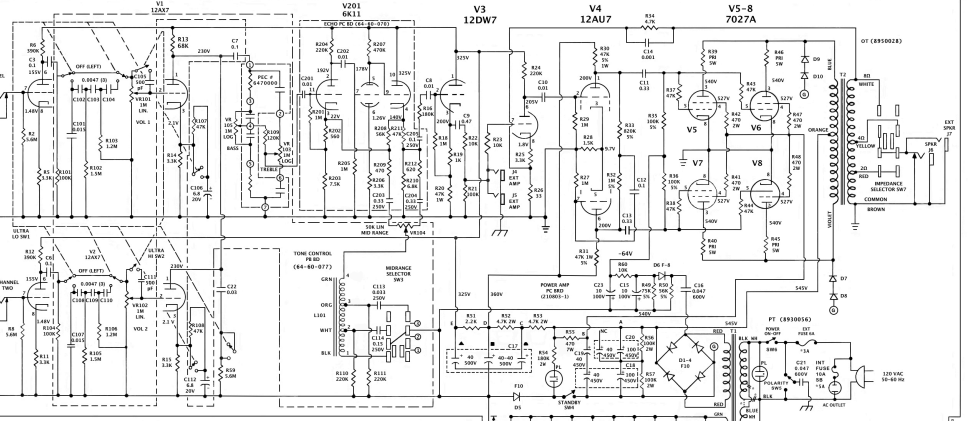

NOTES

1. ALL RESISTORS IN OHMS 1/2W, 10% UNLESS OTHERWISE SPECIFIED.
2. ALL CAPACITORS IN MFD, 6 400V UNLESS OTHERWISE SPECIFIED.
3. ALL VOLTAGE READINGS WITH NO SIGNAL APPLIED USING A 20,000 OHMS PER VOLT VOLTMETER.
4. NUMBERS IN PARENTHESES REFER TO AMPECO PART NUMBER.
5. PARTS DESIGNATED BY * ARE IN 240 VOLT MODELS ONLY. THE P. T. FOR 240 VOLT MODELS HAS BLACK WIRE CONNECTED TO BLUE WHITE WIRE. THE 1200 MODELS HAVE TWO BLACK PRIMARY WIRES.
6. ALL VOLTAGES POSITIVE WITH RESPECT TO CHASSIS GROUND UNLESS OTHERWISE SPECIFIED.
7. CIRCUIT OF CHASSIS MAY ALSO VARY SLIGHTLY FROM THAT SHOWN HERE DUE TO NORMAL PRODUCTION CHANGES.
8. D7-10 ARE SILICON A.V. TYPE 1A, 1400 VOLT DIODES.

REVISIONS	
C	RACK ADAPTER FROM REVISION B, B-2

ADDITIONAL SPECIFICATIONS

MATERIAL

FINISH

REVISIONS			
REVISIONS	BY	DATE	APPROVED
A	JCP	10-17-73	
B	JCP	5-15-74	
C	JCP	10-15-74	

TOLERANCES UNLESS OTHERWISE SPECIFIED
FRACTIONAL ± 1/64 DECIMAL ± .005 ANGULAR ± 1/2°

CONFIDENTIAL
THIS DRAWING IS SUBMITTED IN CONFIDENCE AND IS NOT TO BE REPRODUCED OR DISCLOSED TO OTHERS WITHOUT WRITTEN PERMISSION OF THE AMPEG COMPANY

DO NOT SCALE DRAWING

THE AMPEG COMPANY
DIVISION OF THE MAGNAVOX COMPANY
EAST ST. LOUIS, ILLINOIS

V-48 SCHEMATIC

SIGNATURE | DATE | SHEET SIZE IN INCHES 8 X 11

DR. | CHK. | ENG. | MFG.

SHEET NO. V-48

SCALE

SIZE D

THIS MATERIAL IS THE PROPERTY OF THE AMPEG COMPANY AND IS NOT TO BE DUPLICATED TO OTHERS OR USED FOR OTHER THAN AUTHORIZED MAGNAVOX PURPOSES. ALL DRAWINGS, SPECIFICATIONS, PATTERNS, MODELS, ETC. MUST BE RETURNED TO THE MAGNAVOX COMPANY WHEN THE HOLDER NO LONGER REQUIRES ITS USE FOR AUTHORIZED MAGNAVOX PURPOSES.