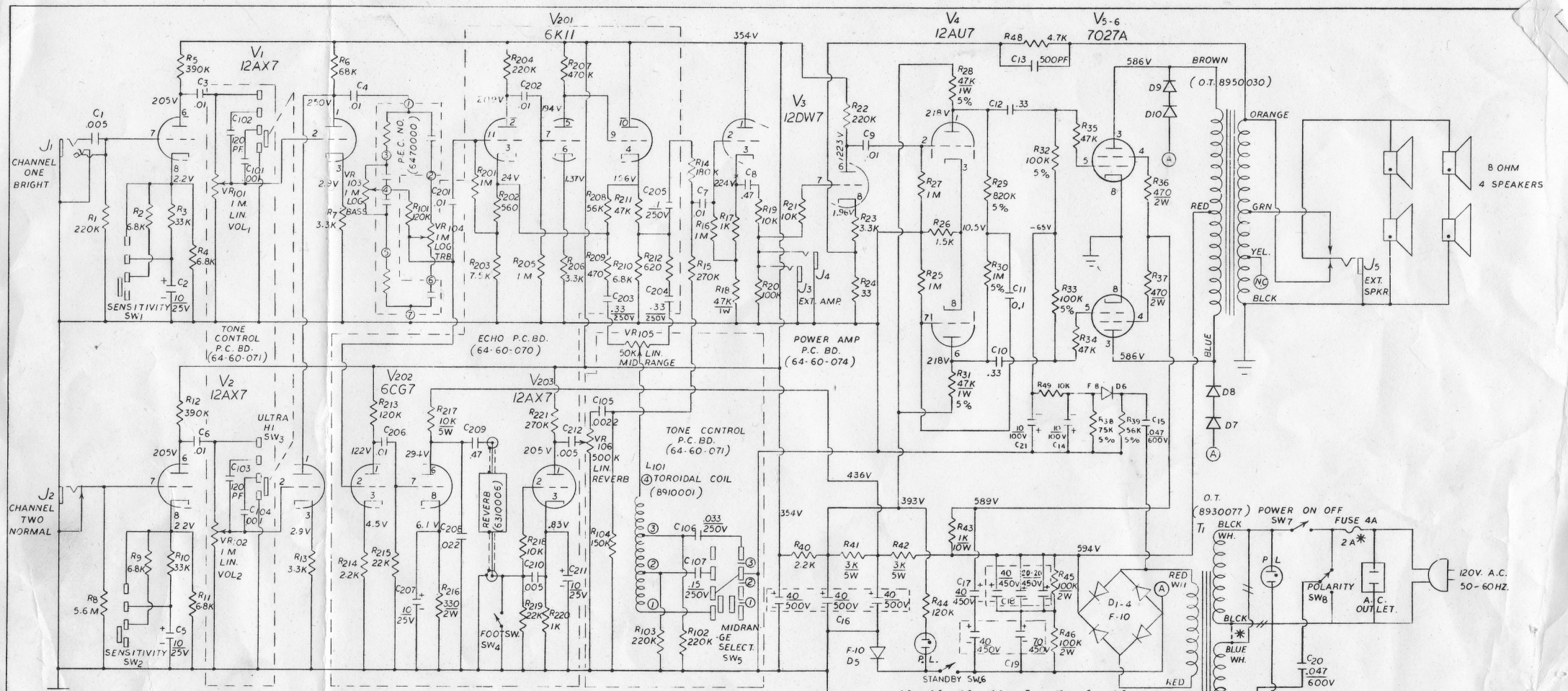
V1 12AX7
V2 12AX7
V201 6K11
V202 6CG7
V203 12AX7
V3 12DW7
V4 12AU7
V5-6 7027A
J1 CHANNEL ONE BRIGHT
J2 CHANNEL TWO NORMAL
SENSITIVITY SW1
SENSITIVITY SW2
ULTRA HI SW3
VR101 1M. LIN. VOL1
VR102 1M. LIN. VOL2
VR103 1M LOG BASS
VR104 1M LOG TRB.
P.C. NO. (6470000)
TONE CONTROL P.C. BD. (64-60-071)
ECHO P.C. BD. (64-60-070)
VR105 50K LIN. MID RANGE
POWER AMP P.C. BD. (64-60-074)
J3 EXT. AMP.
J4
J5 EXT. SPKR
REVERB (6310005)
FOOT SW. SW4
VR106 500K LIN. REVERB
TONE CONTROL P.C. BD. (64-60-071)
L101 TOROIDAL COIL (8910001)
MIDRANGE SELECT. SW5
STANDBY SW6
P.L.
D1-4 F-10
F-10 D5
O.T. (8930077) T1
POWER ON OFF SW7
FUSE 4A
POLARITY SW8
A.C. OUTLET
120V. A.C. 50-60HZ.
8 OHM 4 SPEAKERS
BROWN (O.T. 8950030)
ORANGE
RED
GRN
YEL.
BLCK
BLUE
BLCK WH.
BLUE WH.
RED WH.
GRN.-WHT.
6.3V. A.C.
100Ω HUM BAL.
354V
586V
436V
393V
589V
594V
218V
205V
250V
194V
224V
122V
29V
4.5V
6.1V
.83V
1.37V
1.56V
1.96V
10.5V
-65V
NOTES- ALL RESISTORS IN OHMS 1/2W. 10% UNLESS OTHERWISE SPECIFIED.
ALL CAPACITORS IN MFD. AND 400V UNLESS OTHERWISE SPECIFIED.
- D.C. VOLTAGE READINGS WITH NO SIGNAL APPLIED USING A 20,000 Ω PER VOLT VOLTMETER
NUMBERS IN PARENTHESIS REFER TO AMPEG'S PART NO.
- PARTS DESIGNATED BY * ARE IN 240V MODELS ONLY
D.C. VOLTAGE READING ARE POSITIVE WITH RESPECT TO CHASSIS GROUND UNLESS OTHERWISE SPECIFIED.
CIRCUIT OF CHASSIS MAY VARY SLIGHTLY FROM THAT SHOWN HERE DUE TO NORMAL PRODUCTION CHANGES
- D7-10 ARE SILICON AV. TYPE 1AMP 400V. DIODES.
- THE P.T. FOR 240V MODELS HAS BLCK WIRE CONNECTED TO BLUE WH. WIRE
POST OFFICE BOX 515
AREA CODE (201) 925-8700
ampeg
LINDEN, NEW JERSEY 07036
MODEL VT 40
U.S. PATENT PENDING
DRN BY S.C.
DATE 4-71
DWG NO. 06500
PART NO. 4010260
REV. B