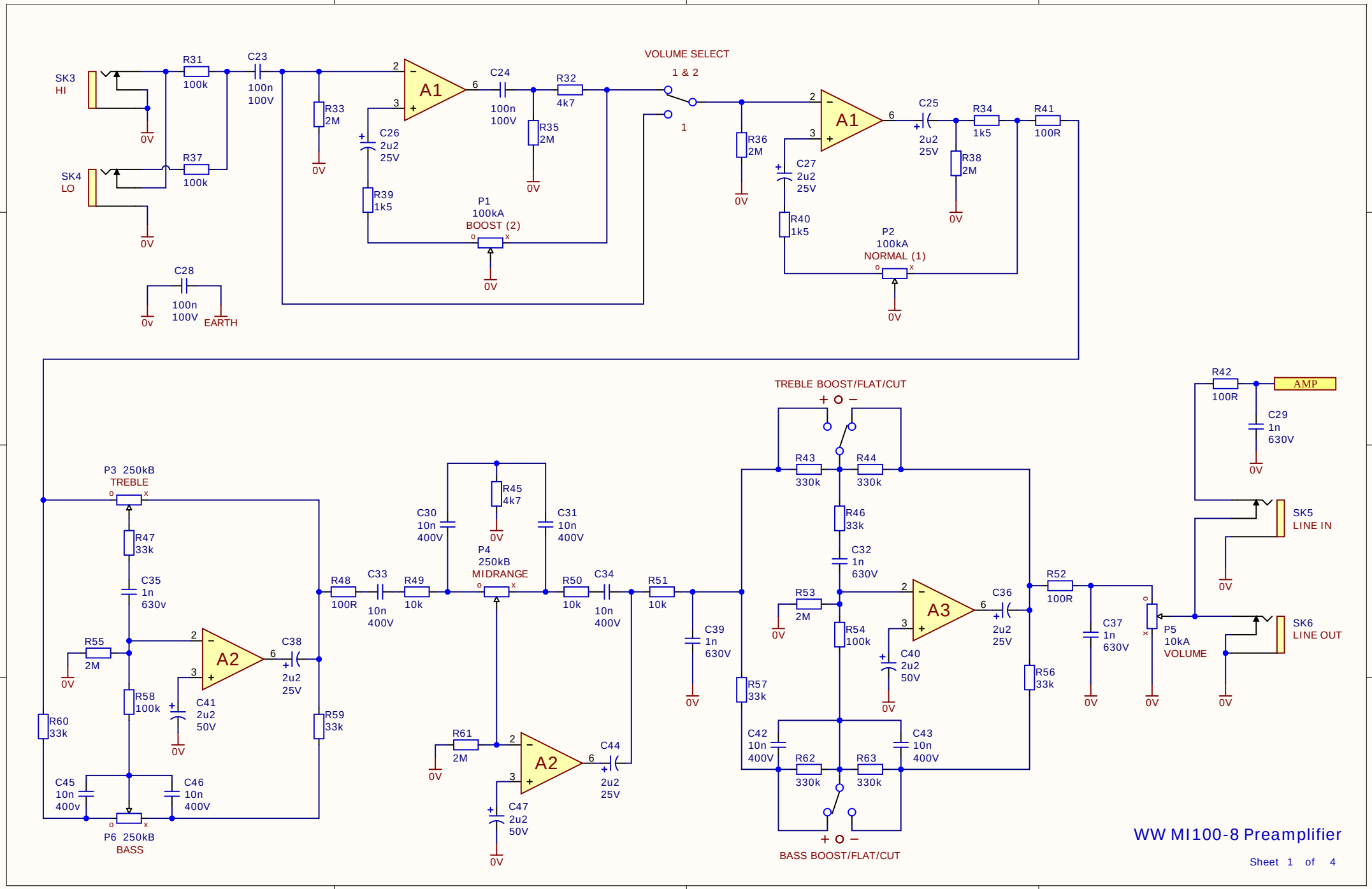
SK3
HI
SK4
LO
R31
100k
R37
100k
C23
100n
100V
R33
2M
C26
2u2
25V
R39
1k5
A1
C24
100n
100V
R32
4k7
R35
2M
P1
100kA
BOOST (2)
VOLUME SELECT
1 & 2
1
R36
2M
C27
2u2
25V
R40
1k5
A1
C25
2u2
25V
R34
1k5
R38
2M
R41
100R
P2
100kA
NORMAL (1)
C28
100n
100V
EARTH
0V
P3 250kB
TREBLE
R47
33k
C35
1n
630v
R55
2M
R58
100k
R60
33k
C41
2u2
50V
A2
C38
2u2
25V
R59
33k
C45
10n
400v
C46
10n
400V
P6 250kB
BASS
R48
100R
C33
10n
400V
R49
10k
C30
10n
400V
R45
4k7
C31
10n
400V
P4
250kB
MIDRANGE
R50
10k
C34
10n
400V
R51
10k
R61
2M
A2
C44
2u2
25V
C47
2u2
50V
C39
1n
630V
TREBLE BOOST/FLAT/CUT
R43
330k
R44
330k
R46
33k
C32
1n
630V
R53
2M
R54
100k
A3
C36
2u2
25V
C40
2u2
50V
R57
33k
R56
33k
C42
10n
400V
C43
10n
400V
R62
330k
R63
330k
BASS BOOST/FLAT/CUT
R52
100R
C37
1n
630V
P5
10kA
VOLUME
R42
100R
AMP
C29
1n
630V
SK5
LINE IN
SK6
LINE OUT
WW MI100-8 Preamplifier
Sheet 1 of 4

GAIN BLOCK A1

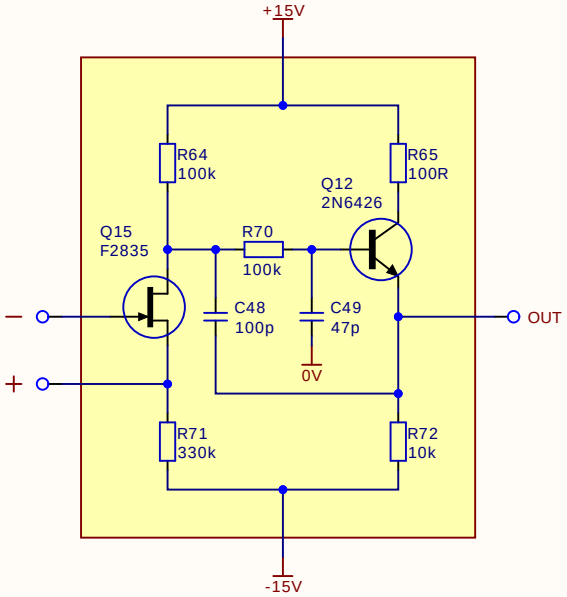

GAIN BLOCK A2

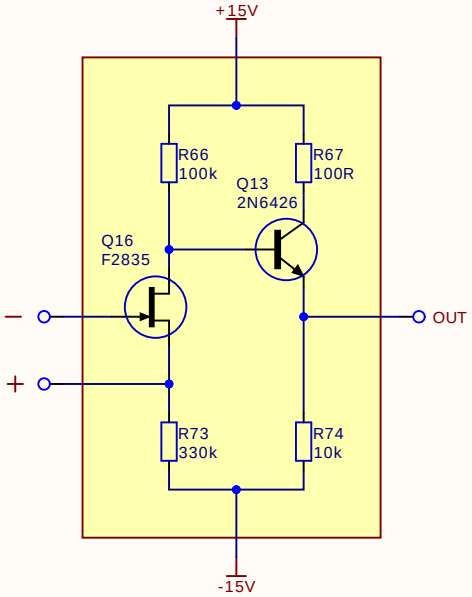

GAIN BLOCK A3

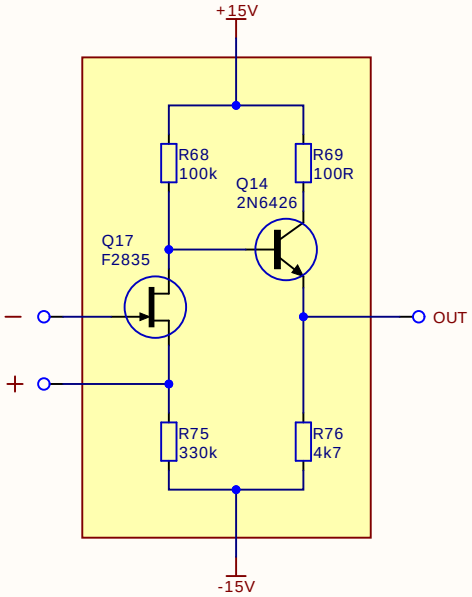

F2835 parameters
Vp = 1.8V/2.15V
Idss = 4mA/5mA

WW MI100-8 Gain Blocks

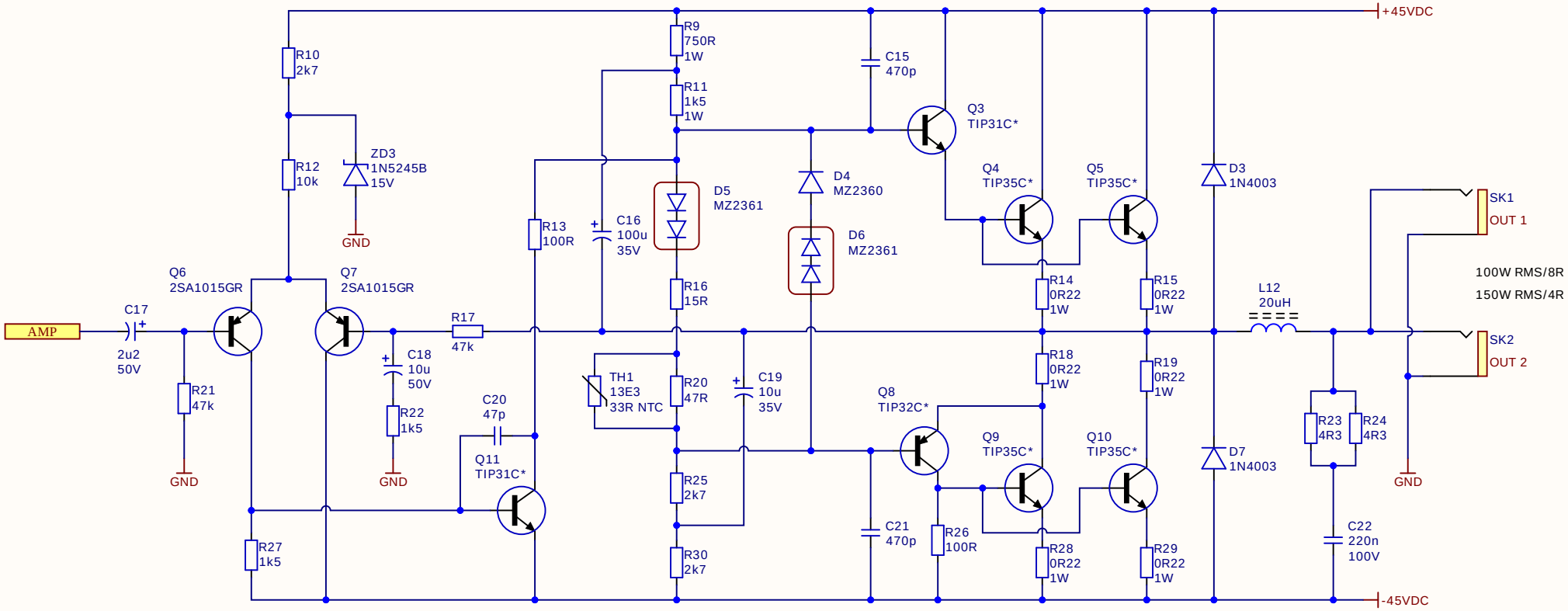

WW MI100-8 Power Amplifier

Sheet 3 of 4

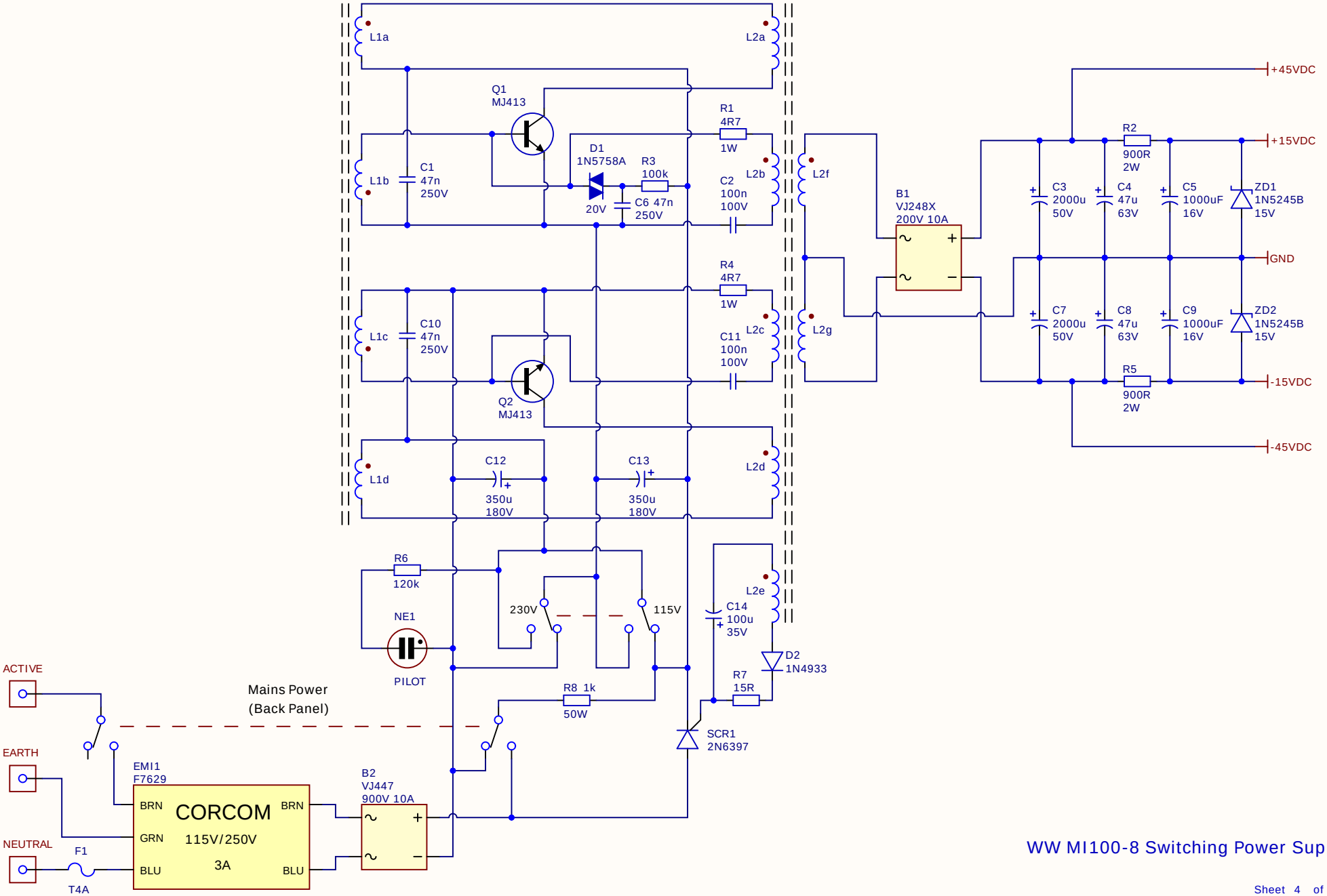
L1a
L2a
Q1
MJ413
R1
4R7
1W
D1
1N5758A
R3
100k
L1b
C1
47n
250V
20V
C6 47n
250V
L2b
C2
100n
100V
L2f
B1
VJ248X
200V 10A
R2
900R
2W
+45VDC
+15VDC
C3
2000u
50V
C4
47u
63V
C5
1000uF
16V
ZD1
1N5245B
15V
GND
R4
4R7
1W
L1c
C10
47n
250V
L2c
C11
100n
100V
L2g
C7
2000u
50V
C8
47u
63V
C9
1000uF
16V
ZD2
1N5245B
15V
R5
900R
2W
-15VDC
Q2
MJ413
-45VDC
L1d
C12
350u
180V
C13
350u
180V
L2d
R6
120k
NE1
PILOT
230V
115V
L2e
C14
100u
35V
D2
1N4933
R7
15R
R8 1k
50W
SCR1
2N6397
ACTIVE
Mains Power
(Back Panel)
EARTH
EMI1
F7629
CORCOM
115V/250V
3A
BRN
GRN
BLU
B2
VJ447
900V 10A
NEUTRAL
F1
T4A
WW MI100-8 Switching Power Supply
Sheet 4 of 4